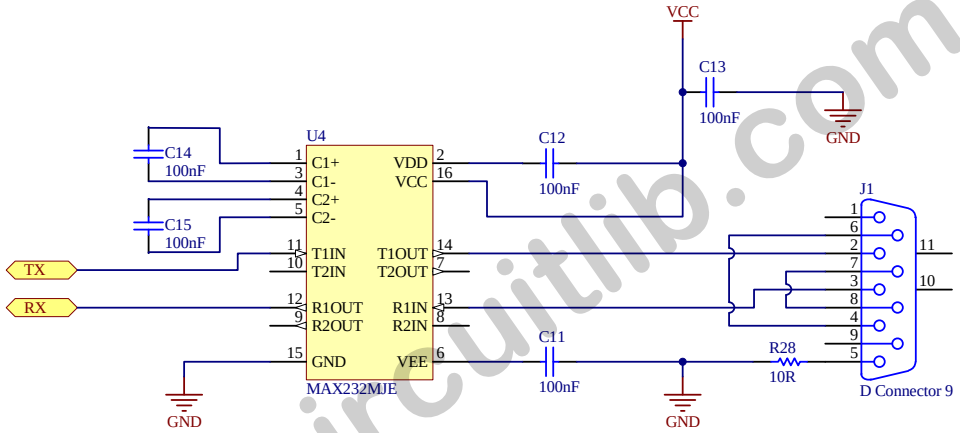

PC Interface Demo Board - RS-232 Interface section

By G. Adamidis

Sheet 4 of 4

09/10/2011

www.circuitlib.com