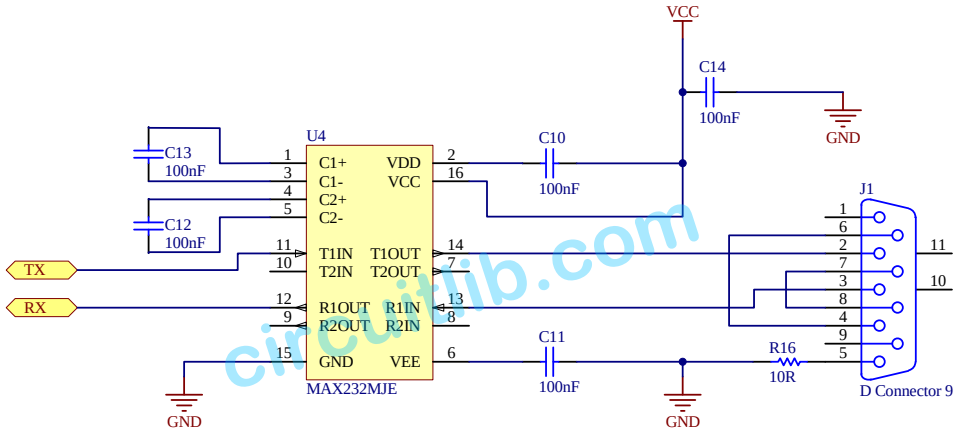

circuitlib.com