Broadband FM Exciter 88 - 108 MHz, by A.G
Built and tested (12/01/2004)

All resistors are 1/4W carbon type unless otherwise noticed.
Capacitors on RF sections are low voltage ceramics. Use NPO for better results.

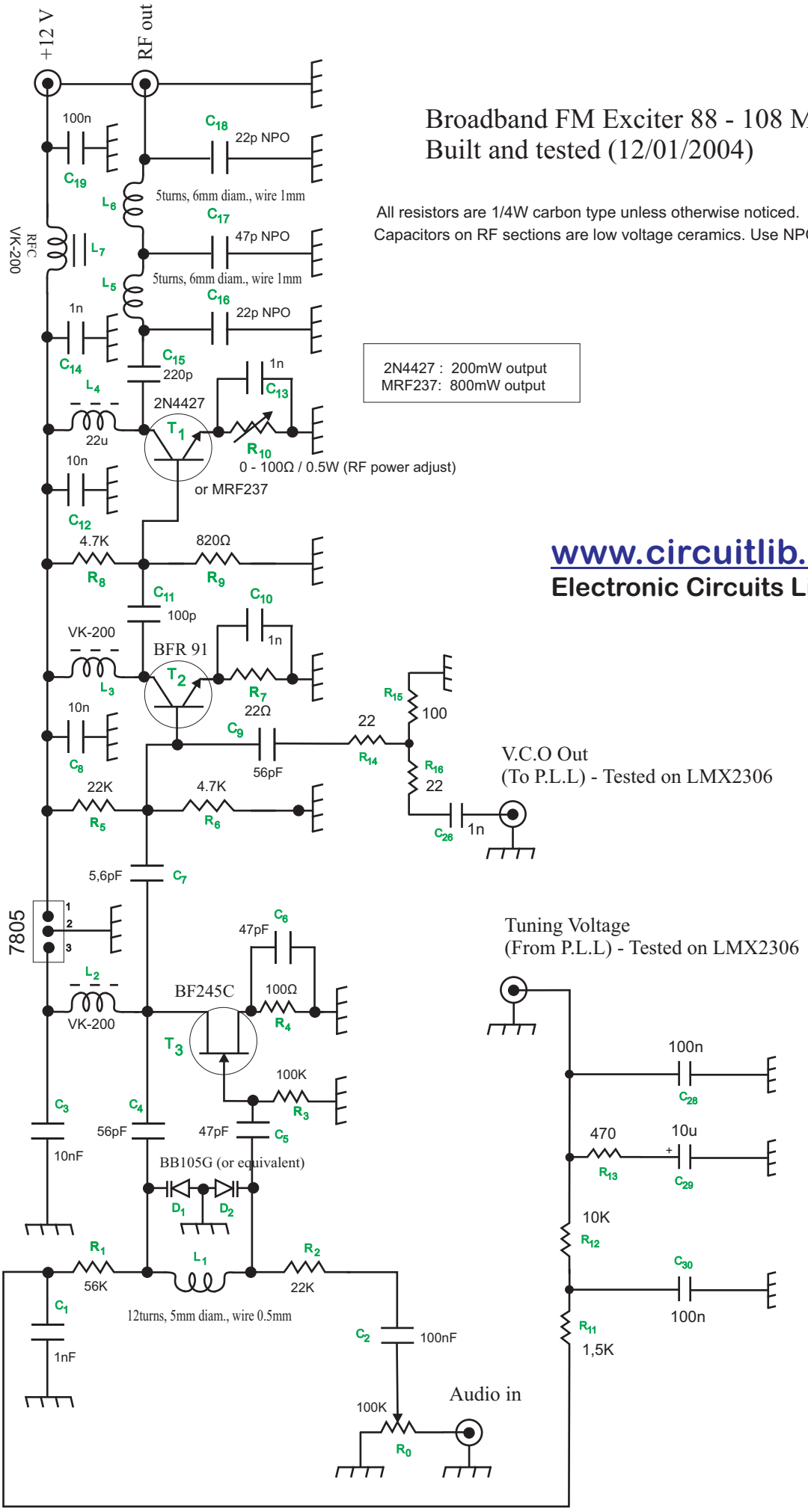

www.circuitlib.com
Electronic Circuits Library